NITTAN	EVOLUTION EV-PH Analogue Addressable Optical Smoke / Heat Detector	TD-EV-PH-07 September 2015 Page 1 of 1

TECHNICAL DATASHEET

Part Numbers and Product Order Codes:-

Part Number	EV-PH
Description	Analogue Evolution Optical Smoke / Heat Sensor.
Computer Reference Number	
Nittan Standard	F20N82400

Technical Specifications:-

Sensor Method	Light Scatter and Thermistor
Sensor Element	IR Diode and Thermistor
Operating Voltage	20V d.c. to 35V d.c.
System Voltage	35V d.c.
Quiescent Current	200µA
Alarm Current	5mA
Current for external remote LED indicator	2mA
Operating Temperature	– 10℃ to + 55℃
Storage Temperature	– 20℃ to + 60℃
Charging Time	4 minutes
Relative Humidity	≤ RH95% non-condensing.
I.P. Protection Rating	IP42
Addressing Method	Soft addressing, Non-Volatile EEPROM.
Material	ABS
Dimensions	∅104mm x 42.5mm (Sensor head) ∅104mm x 57.5mm (Sensor head and UB-6-EV)
Mass	118g (Sensor head) 183g (Sensor head and UB-6-EV base)
EMC Conformance	EMC conformance to BSEN50130-4.
CPR Number	0832-CPR-F0414 / 0832-CPR-F1036
Standards / Certification	EN54-5 & EN54-7 / LPCB 041 / 842
DoP Number	F0414 / F1036
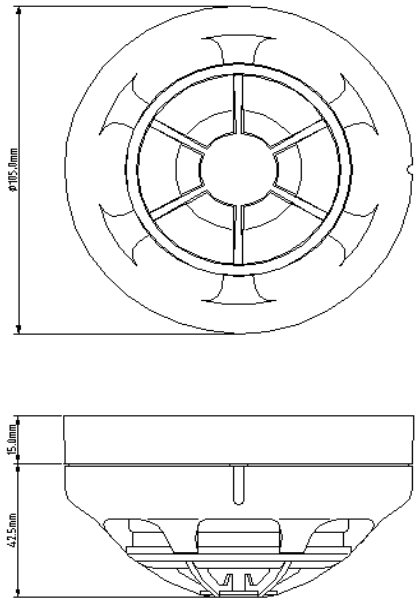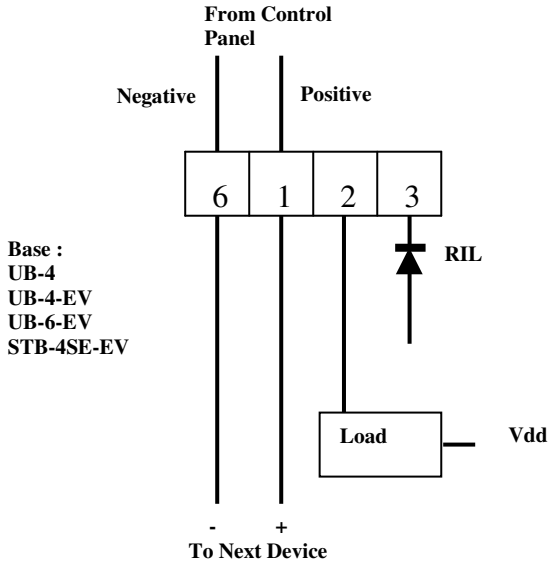
All wiring must conform to the current edition of IEE Wiring regulations and BS5839 Part 1
All loop Cable Screens shall be connected together, but must be Isolated from Ground. Cable Screens shall be connected to Earth Ground within the Control Panel ONLY.