TS.24 Slide Arm

Power Adjustable EN2-4 by Spring

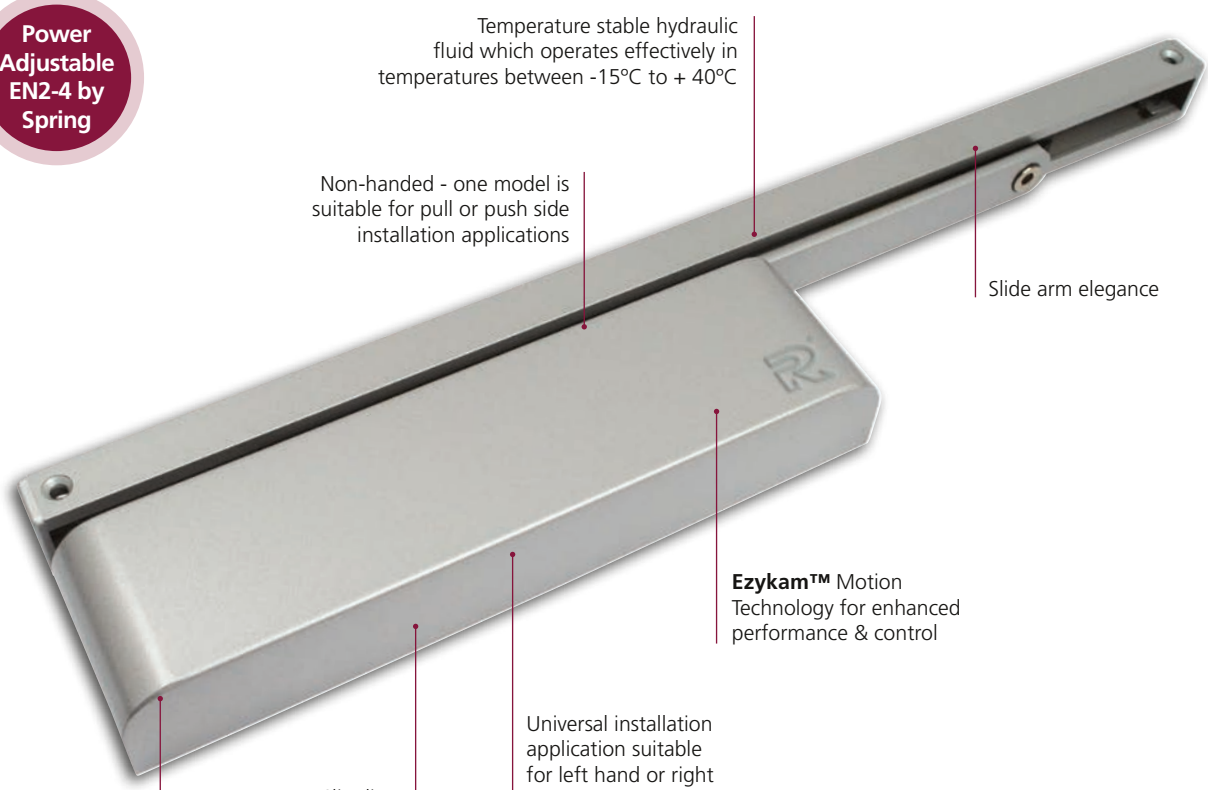

Silver (SE)

Satin Nickel Plate (SNP)

White (WH)

Product Overview

- ✔ Variable power size EN 2-4
- ✔ CE marked
- ✔ Third Party performance tested to over 500,000 cycles
- ✔ **Ezykam™** motion technology for immense control throughout the full opening and closing cycle of the door
- ✔ Easy to read instructions, saving over 12 minutes of fitting time
- ✔ Corrosion Grade 3 – Recommended for internal use

CE
1720

01246 261491 | sales@rutlanduk.co.uk | www.rutlanduk.co.uk

Specification Overview

- Fire Tested to EN1634
- Max Door Weight up to 80kg
- Opening Angle 180°
- Max Door Width 1100mm
- Adjustable Closing Speed
- IFCC 1514
- Power Size EN2-4
- Adjustable Latch Speed
- Guarantee
- TS24-CPR-44-0316-17-03
- Rut Lock

All dimensions shown are in mm.

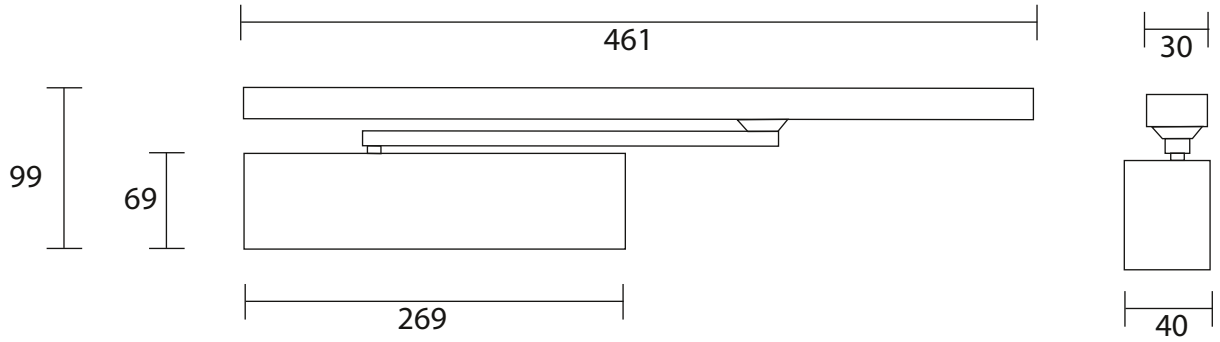

For fitting instructions see website - www.rutlanduk.co.uk

Technical Information

BS EN 1154 Classification

TS.24 door closers have been independently tested to conform with the EN 1154 performance standard. They are CE marked and classified as follows:

3	8	2/4	1	1	3

BS EN 1634 Fire Test

TS.24 door closers have been tested to EN 1634 Fire Pressure Test for, 30 and 60 minutes on a TFTDoor and TFCDoor.

Options

- This hold-open device can not be used on fire doors - not CE marked)
- Integral cushion stop (product code SA.CS) - for a cushioned back check function with multi-angle door opening limiter
- For push side application, you will need to request a PSB.24 bracket

Description	EN Size	Finish	Re-order Code	Product Code	Box Qty
TS.24 Combined unit (closer, slide arm, cover,)	2-4	Silver	**12105**	TS.24.SE	6
	2-4	Satin Nickel	**12106**	TS.24.SNP	6
	2-4	White	**12242**	TS.24.WH	6
Push Side Brackets	-	Silver	**11036**	PSB.24.SE	
		Satin Nickel	**11040**	PSB.24.SNP	
		White	**11043**	PSB.24.WH	