AssistCall

VoxIgnis

Emergency Assist Alarm

ViAC-ACA-SS

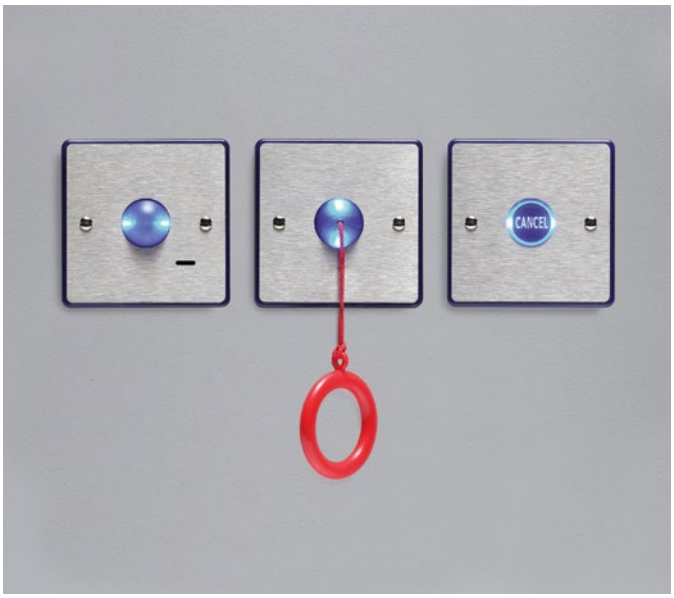

All Lexicomm Emergency Voice Communications Systems (EVCS) are designed to comply fully with the requirements of BS5839-9: 2021 for use as a disabled refuge system (DRS) with integrated Emergency Assist Alarm System. The ViAC-ACA-SS kit provides a BS8300 compliant accessible toilet solution including the "Acknowledge" signalling required for remote locations.

- Compact design
- BS8300 "Acknowledge" feature
- High volume sounder
- Blue indication
- Flush or surface mounting
- Braille enhanced cancel button
- Stainless steel finish

Overview

The ViAC-ACA-SS provides a simple solution to integrating emergency assist alarm call systems within an EVCS, providing a single display point for all disabled calls within a building.

It can be used on a dedicated line, or may share a line with the ViLX-OSB disabled refuge outstation (as long as fire rated cable is used), where operation of the refuge point overrides the assistance call (ideal where a disabled toilet is adjacent to a refuge lobby).

The ViAC-ACA-SS kit is also compatible with the ViAC-4ZC-SS four zone control module and Assist Call Network system for applications without EVCS.

Operation

When a pull cord is activated, the over-door indicator and cancel plates emit an alternating tone with flashing blue indication.

After system acknowledgment the over-door and cancel indicators change from flashing to steady illumination, with a double beep tone every 15 seconds. This reassures the occupant that help is on the way, instruction signage is provided within the kit.

Additional features

The Assist Call range of integrated emergency assistance alarms have several advantages over other self contained units. As follows:

- No local mains PSU at the WC
- All field wiring is monitored
- Central indication
- Acknowledge feature as per BS 8300-2:2018

Suitability

The ViAC-ACA-SS is an emergency assist alarm system as defined in BS8300, and is designed to be used by the public as an emergency assistance alarm, and integrated into the EVCS as allowed by BS5839-9: 2021. The ViAC-ACA-SS kit can be expanded using additional plates making it suitable for accessible bedrooms and at the locations described in Building Regulations Approved Document M2 2020 and BS8300.

Mounting Instructions

The ViAC-ACA-SS components are not supplied with back-boxes as they can be used with any "MK" style single back-box over 25mm deep. To accept cable glands the back box needs to be 35mm deep) including metal clad surface types and plastic plasterboard liner boxes. The units should be mounted as shown below to comply with the requirements of Building Regulations Document M (Access for the Disabled) and BS 8300-2:2018. When flush mounting use the back-box manufacturers recommended cut out.

Emergency Assist Alarm

ViAC-ACA-SS

Technical Specification

Details	ViAC-ACA-SS
Physical	
Height	86mm
Width	86mm
Visible plate depth	12mm
Weight	600g
Material	Stainless Steel/ Blue polycarbonate
Finish	Brushed
Recommended Cables	
Type	**Cores** / **Distance from panel/controller**
PVC or fire rated*	2 core 1mm / 500m
Cat5/6	1 x pair 0.22mm / 50m
Standards Compliance	
EMC	EN 55035:2017+A11:2020 EN 55032:2015+A1:2020
LVD	EN IEC62368-1:2020 + A11:2020
Product Family	BS 8300-2:2018 BS 5839-9:2021

Details	ViAC-ACA-SS
Part Numbers	
Kit	ViAC-ACA-SS
Over door	ViAC-ODP-SS
Cancel	ViAC-CNP-SS
Pullcord	ViAC-CPP-SS
Call button	ViAC-CLP-SS
Call/ Cancel button	ViAC-CCP-SS
Ancillary Cancel button	ViAC-ACP-SS
Switch Interface plate	ViAC-SIP-SS

*If sharing a line with ViLX-OSBv

Mounting

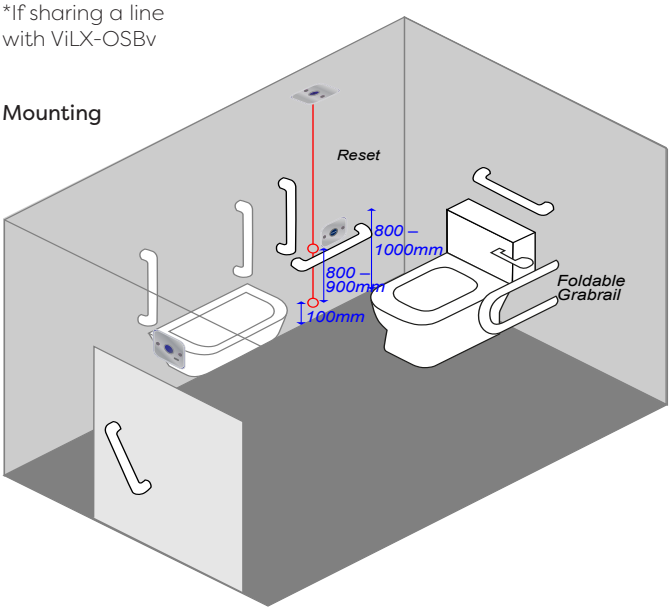
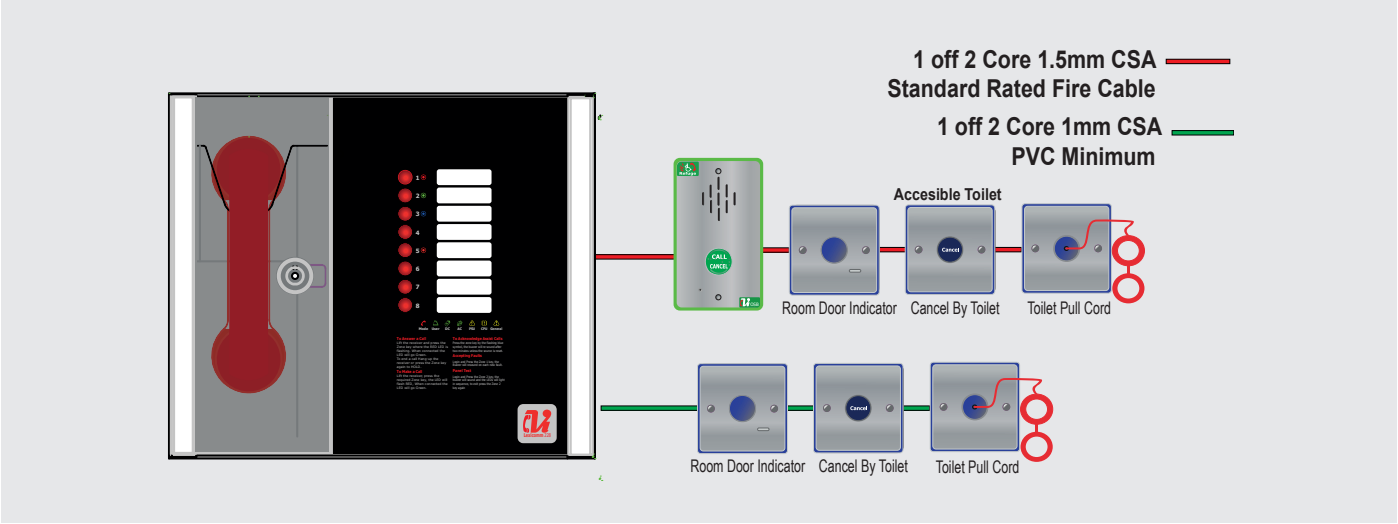
Connections